# 9. Schematic Diagrams

## 9-1. Body Slide V/R Control

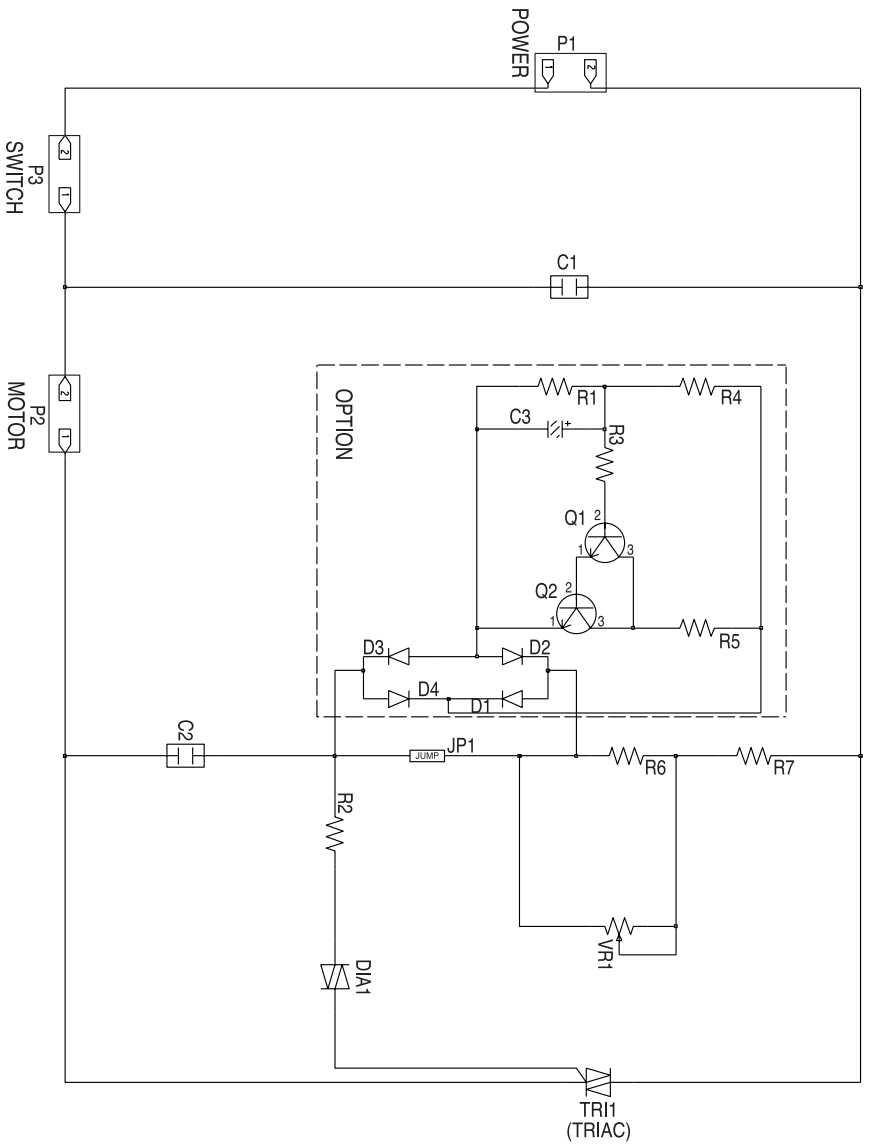


-. For “PCB Error Diagnosis &Checking ”, Refer to Page 14
-. For “ PCB Diagrams ”,Refer to Page 27

## 9-2. Handle Slide V/R Control

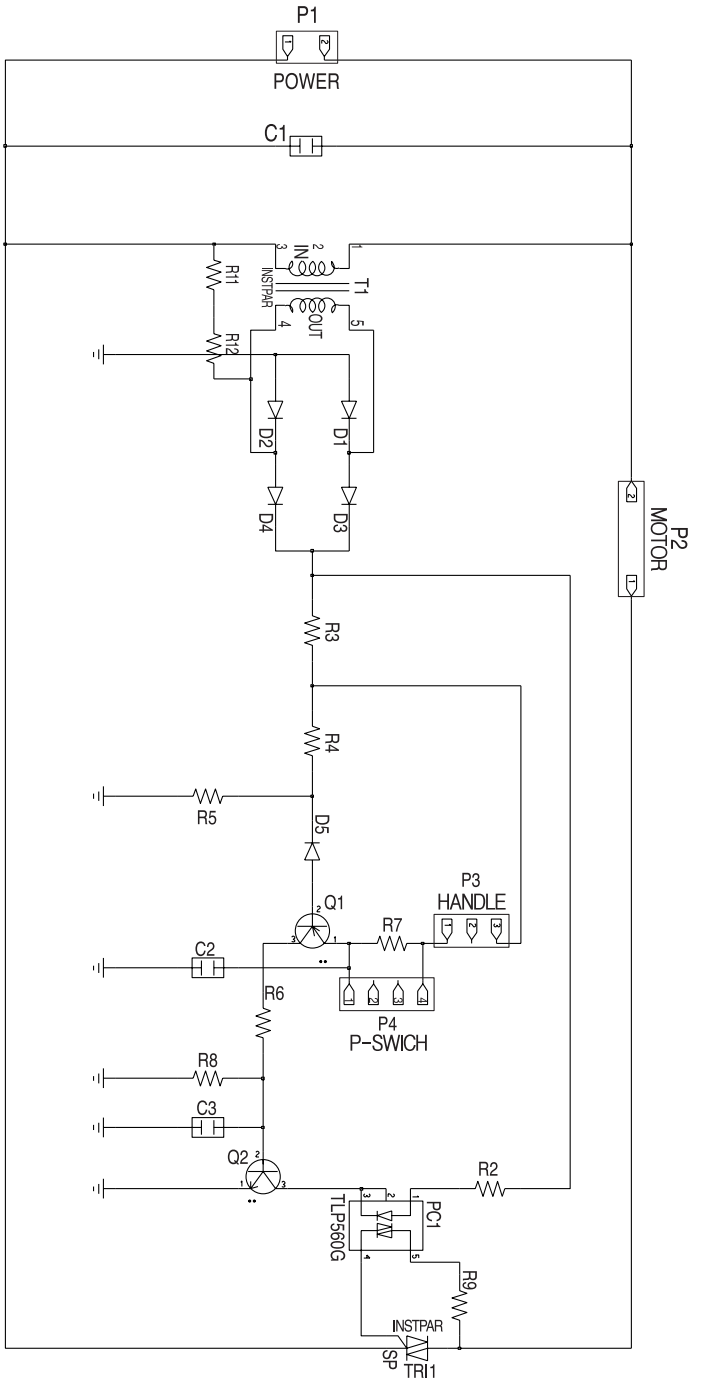


-. For “PCB Error Diagnosis &Checking ”, Refer to Page 15
-. For “PCB Diagrams ”, Refer to Page 28